RUD INOX-STAR Lifting Eye Bolt

Product information



The RUD INOX-STAR® is a stainless steel lifting eyebolt designed for industrial lifting applications requiring corrosion resistance and multidirectional loading. Its 360° rotatable design allows alignment with the load direction, while the duplex stainless steel construction provides high resistance to seawater and environments with elevated chloride concentrations.

Best used for:

- Lifting applications in marine and chloride-rich environments.
- Threaded or through-hole installations requiring multidirectional load attachment.

Product benefits:

- 360° rotatable design enables alignment with different loading directions.
- Duplex stainless steel 1.4462 provides high resistance to seawater and chloride exposure.
- Variable bolt lengths support installation in threaded and through holes.
- 100% electromagnetic crack testing of load-bearing components supports quality assurance.

... *Read more*

Material: Duplex Steel 1.4462
Temperature range: -40°C up to +280°C

Safety factor: 4:1

© November 2026 - All Rights Reserved

RUD INOX-STAR Lifting Eye Bolt

Blueprint

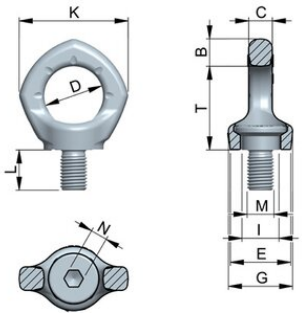

Technical data

Part code	WLL ton	Thread mm	B mm	C mm	D mm	E mm	G mm	I mm	K mm	L mm	M mm	N mm	T mm	Weight kg
421100031150	0.3	M10	12	10	25	25	28	16.3	46	15	M10	6	35	0.11
421100031155	0.3	M8	12	10	25	25	28	16.3	46	12	M8	6	35	0.11
421100051150	0.5	M12	14	12	30	30	32	18	56	18	M12	8	43	0.19
421100101150	1	M16	16	14	35	36	38	22	65	24	M16	10	50	0.31
421100201150	2	M20	19	16	40	43	47	27.5	74	30	M20	12	58	0.52
421100251150	2.5	M24	24	19	48	51	56	33	92	36	M24	14	70	0.92

© November 2026 - All Rights Reserved