Lifting Eye RUD ACP-TURNADO

Product information



- Unique RUD spring meachanism
- No stopping of the lifting bale
- No dangerous transverse loads - no worst case
- Integrated RFID transponder to make checks easier
- Wear lenses for checking discard criteria

Also available in long version.

... *Read more*

Marking: According to standard
Temperature range: -40°C up to +100°C.
Standard: EN 1677-1

Safety factor: 4:1

© November 2026 - All Rights Reserved

Lifting Eye RUD ACP-TURNADO

Blueprint

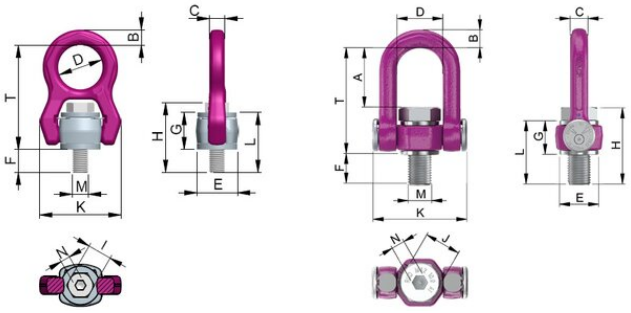

Technical data

Part code	WLL ton	Thread mm	A mm	B mm	C mm	D mm	E mm	F mm	G mm	H mm	I mm	K mm	L mm	M mm	N mm	T mm	Weight kg
42157912061	0.7	M8	-	11	10.5	38	30	12	28	45	13	58	40	M8	5	83	0.36
42157912064	1	M10	-	11	10.5	38	30	16	28	50.4	17	58	44	M10	6	83	0.37
42157909314	1.35	M12	-	11	10.5	38	30	19	28	54.5	19	58	47	M12	8	83	0.38
42157909316	2.5	M16	-	14	14	50	40	22	36	68	24	76	58	M16	10	107	0.88
42157909317	4	M20	-	17	17.25	50	45	26.5	43.5	82.5	30	89	70	M20	12	118	1.41
42157909318	6.3	M24	-	23	23	66	60	34	55	104	36	120.5	89	M24	14	154	3.16
42157909319	8	M30	-	29	27	75	75	41.5	68.5	128.7	46	148	110	M30	17	183	5.69
42157911052	12.5	M36	106	32	32	82	70	45	60	128	55	168	105	M36	22	189	7.1
42157911053	16	M42	106	32	32	82	70	53	60	136	65	168	113	M42	24	189	7.5
42157912630	20	M48	127	45	45	103	90	61	78.5	169	75	204	139	M48	24	235	16.04
42157912631	24	M52	123.5	45	45	103	95	65	108	173	75	204	145	M52	24	232	16.34
42157912632	27	M56	123.5	45	45	103	95	70	108	178	75	204	150	M56	24	232	16.5
42157912633	32.5	M64	123.5	45	45	103	95	80	108	188	75	204	-	M64	24	232	17.19
42157912634	32.5	M72	123.5	45	45	103	95	90	108	198	75	204	-	M72	24	232	18.21
42157912635	32.5	M80	123.5	45	45	103	100	100	108	208	75	204	-	M80	24	232	19.32
42157912636	32.5	M90	123.5	45	45	103	110	113	116	229	75	204	-	M90	24	240	21.52
42157912637	32.5	M100	123.5	45	45	103	120	125	116	241	75	204	-	M100	24	240	23.78

© November 2026 - All Rights Reserved