REMA X-BL Battery-powered electric chain hoist

Product information



The REMA X-BL battery-powered chain hoist offers the flexibility of a manual chain hoist, the pwer of an electric hoist, and the mobility of a cordless tool. The battery-powered chain hoist is surprisingly versatile; it has its own power source, is lightweight, compact yet professionally powerful, and can be used in a wide range of industries where mobility and flexibility are crucial.
In short: wherever mobile lifting is required, the REMA X-BL battery-powered chain hoist is your ideal partner.

Properties

- Brake that holds the load at any desired height.
- Limit switches for highest and lowest hook positions.
- Power supply 18/36 V.
- Galvanized load chain, Class DAT (Grade 8).
- In case of overload, the hooks will gradually bend and do not suddenly break.
- 1 speed.
- Brushless DC electric chain hoist
- Lion battery 18 V 4.0 Ah
- Thermal overload protection

Standard delivery

- 3 m lifting height (maximum distance between top and bottom hook).
- 1.8 m control cable.
- Limit switches highest and lowest hook position.
- Push-button 18/36 V control unit.
- Plastic chain bucket for max. 6 m lifting height.
- Incl. battery and battery charger

... *Read more*

Material: Steel
Marking: According to standard, CE-mark
Standard: EN 12100, EN 14492, EN 60204-32, EN 818-7

© November 2026 - All Rights Reserved

REMA X-BL Battery-powered electric chain hoist

Blueprint

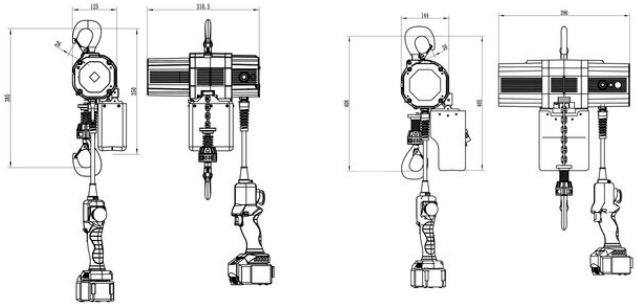

© November 2026 - All Rights Reserved